5th Automotive CFD Prediction Workshop Case 1: Windsor Squareback at Small Yaw Case Description

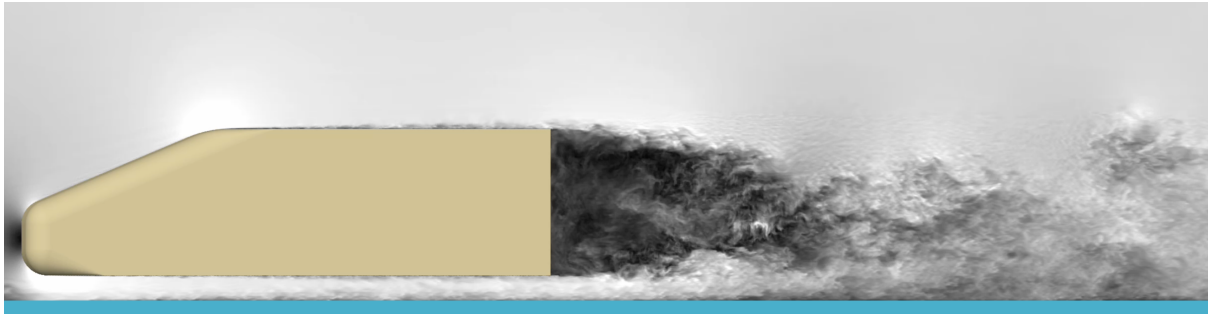

Gary J. Page
G.J.Page@lboro.ac.uk
Loughborough University
V0.5 19 February 2026; Copyright: G.J.Page 2026; License: CC BY-NC 4.0

Introduction

This case requires the simulation of a simplified vehicle-like shape in wind tunnel conditions and is intended to capture the important flow-field structures without needing to model complex geometrical detail as is found in Case 2. It is a continuation of the Windsor squareback case from the previous Automotive CFD Prediction Workshops, and **the case definition is identical to that used in AutoCFD4.**

To participate in the workshop we need a minimum of one calculation for the baseline **g2** grid, but we will be encouraging participants to carry out studies that involve a more extensive number of calculations.

The Windsor model, as developed by Steve Windsor of Jaguar Land Rover, is described in the PhD thesis of Varney [1]. Measurements were taken at the Loughborough University wind tunnel at a Reynolds number of approximately 3 million (based on vehicle length). The full dataset is available on the Loughborough University open data repository [2] and the National Wind Tunnel Facility Experimental Database [3] has a more user friendly access. Note that the data in the Varney thesis is for corrected force coefficients – that is accounting for the wind tunnel blockage to present data appropriate to a vehicle in free air. The repository has the 'raw' uncorrected data, and since we are computing the wind tunnel flow, this is the most appropriate data to compare to.

Geometry and Domain

The model geometry is shown in Figure 1. The reference frontal area is defined by the vehicle height and width and rounded to be 0.112m^2. The reference length used for pitching moment is the wheelbase 0.6375m.

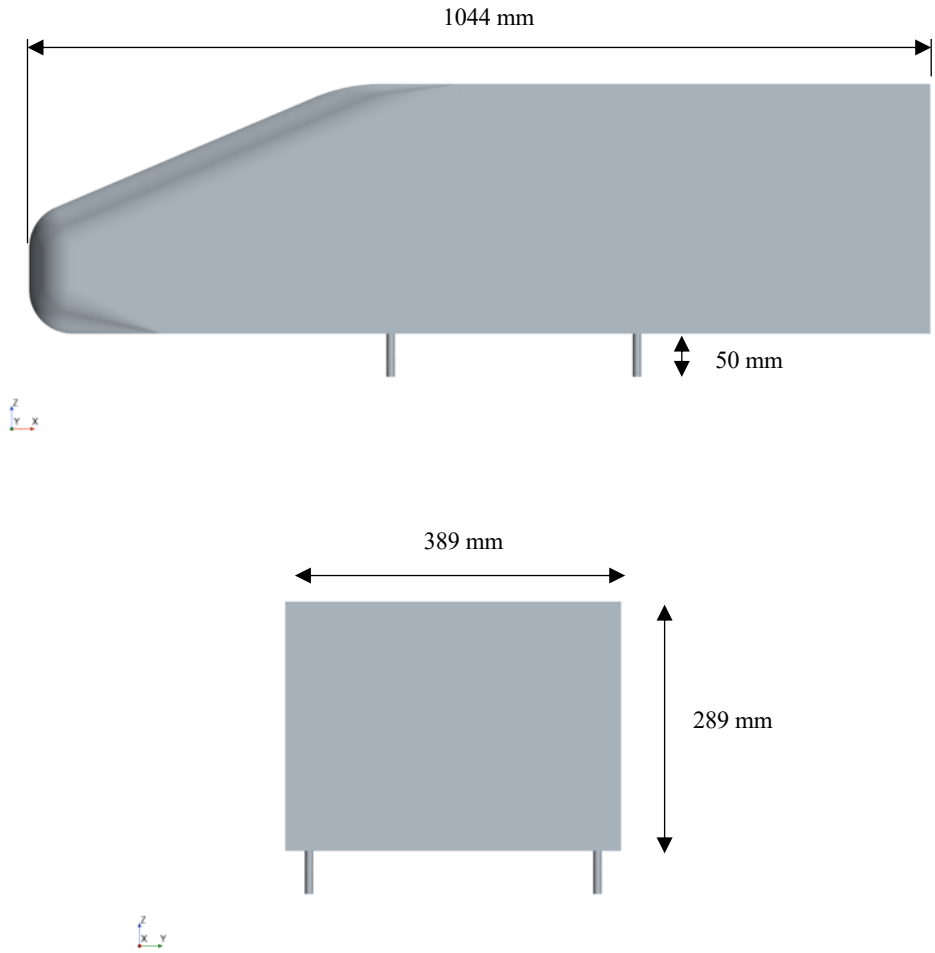

Figure 1: Windsor model squareback [1]

The CAD geometry of the model has its origin on the ground plane, in the symmetry plane midway between the wheels. The coordinate system has x in the streamwise direction (hence the nose is negative x), z upwards and hence positive y is towards the right of the vehicle. The (unyawed) nose of the vehicle is at x=-0.56075 m, the rear at x=0.4835 m. (The sides of the car are at y=+/-0.1945 m, the car underbody at z=0.05 m and the car roof at z=0.339 m).

The model is yawed by -2.5 degrees around the z-axis, so generating a positive side force consistent with the experiment. The experimental forces and moments are in the coordinate system of the yawed model.

The model is mounted in the wind tunnel with four pins at a ground clearance of 50 mm and zero pitch. These pins should be included in the integration of the force coefficients.

The experimental wind tunnel has a 3.2m long working section with a 1.92 m wide x 1.32 m high cross section expanding to 1.94 m wide x 1.32m high at the end of the section. There is no moving ground plane and so boundary layers grow along the walls. Experimental measurements [4] at the centre of the working section quote a boundary layer thickness of 60 mm, displacement thickness of 9.4 mm and momentum thickness of 5.5 mm. The maximum turbulence intensity was measured to be approximately 3% at the edge of the boundary layer.

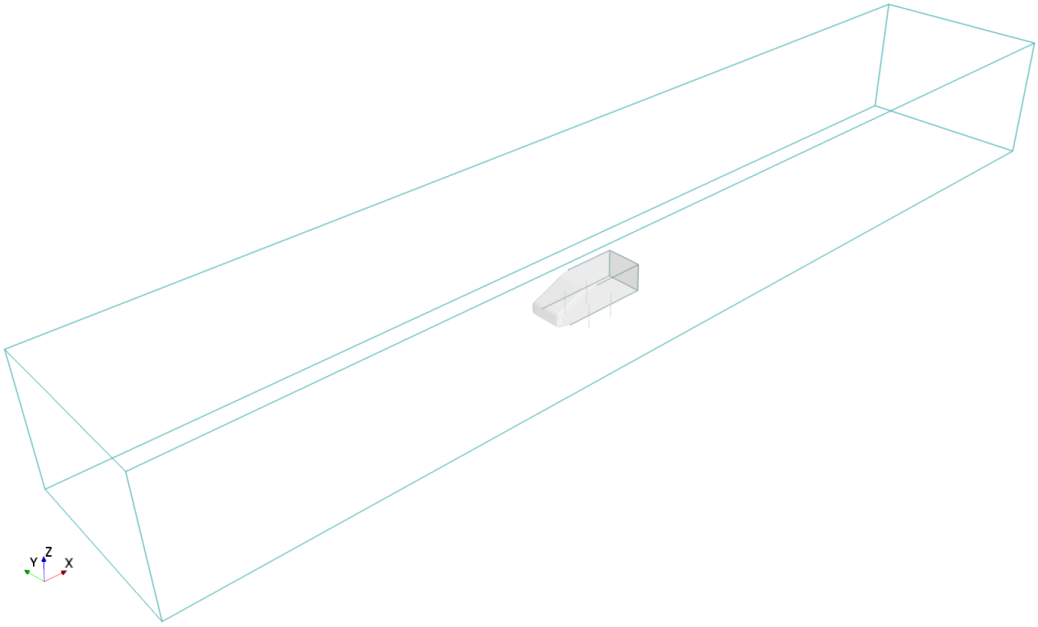

Figure 2: Computational wind tunnel domain

The domain required for this case (see Figure 2) represents the wind tunnel confinement but with the following modifications:

1. Parallel walls
2. Only the ground plane has a no slip condition and hence has boundary layer growth; the top and side walls should be treated as a slip or 'inviscid' wall.
3. A long parallel inlet run is used in order to grow a boundary layer on the ground plane of approximately the correct thickness.
4. A parallel exit run is added downstream to avoid interactions with the wake.

The domain extends upstream to x=-5 m and downstream to x=+6m (the model is x=-0.56 m nose to x=+0.48 m base). The width and height of the CFD domain matches the wind tunnel.

An empty wind tunnel with these dimensions was set up in CFD and when run with the SST k-ω turbulence model the simulated boundary layer height at the centre of the working section matched the experimental values well and had a turbulence intensity at the edge of the boundary layer of approximately 1.5%, increasing to a peak of 5% close to the wall.

Any user generated grids should use these same domain dimensions and boundary condition types.

Grids

The grids are generated using a Cartesian trimmer mesh with prism layers on no-slip walls. There are three grids: baseline **g2**, coarse **g1** and fine **g3**. All three grids have the same wall normal grid spacing and prism layer thickness and vary the number of cells by adjusting all other cell dimensions consistently. The base **g2** has 37 million cells with a smallest cubical cell of dimension 0.0024 m in the wake, and on the model surface of 0.0024 m streamwise and spanwise and 7×10^{-4} m normal (giving an aspect ratio of 3.4). The coarse **g1** grid has 6.3 millions cells by doubling the cell sizes to 0.0048m whilst retaining the same wall normal spacing of 7×10^{-4} m. It was aimed to halve the cell dimensions for the finer grid, but to keep this under 200 million cells a factor of 0.55 was applied. Hence the smallest cells have a

dimension of 0.00132 m. The dimensions of the refinement zone, near wall spacing and prism layer thickness are the same for all grids. The same grids should be used RANS and scale resolving methods. As compared to a typical RANS or DES grid, the aspect ratios near the wall are quite low resulting in some inefficiencies. This type of grid follows typical guidelines for Wall Modelled LES. Refinement zones are placed in the wake and under the vehicle (see Figure 3)

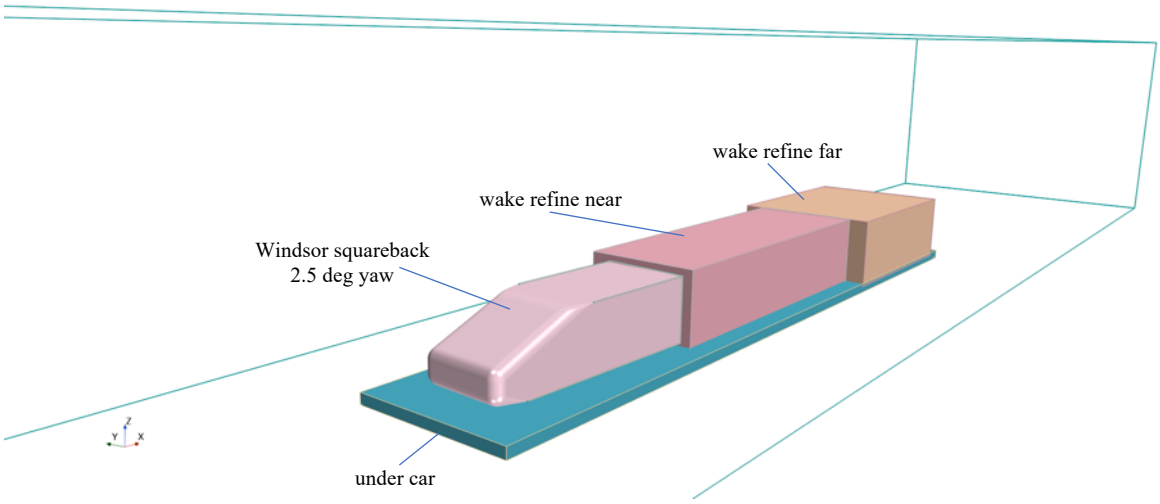

Figure 3: Grid refinement zones

The y+ for the cell centre on the surface of the vehicle are typically 40, with values of 10 to 20 for the rear of the model. On the ground underneath the model the cell centre y+ is around 50, increasing to 75 away from the model (Figure 4). Some details of the g2 grid are shown in Figure 5 to Figure 9.

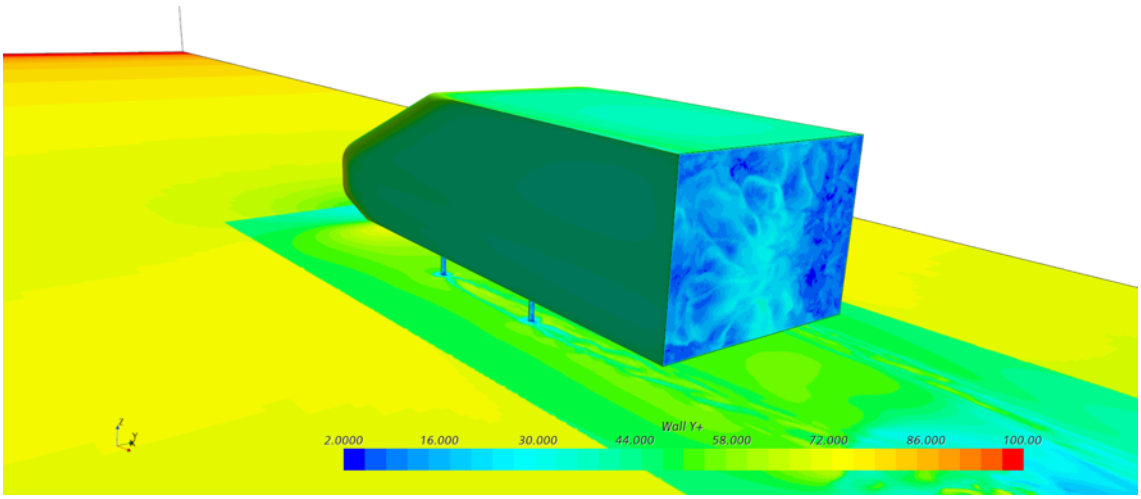

Figure 4: Instantaneous near wall cell centre y+

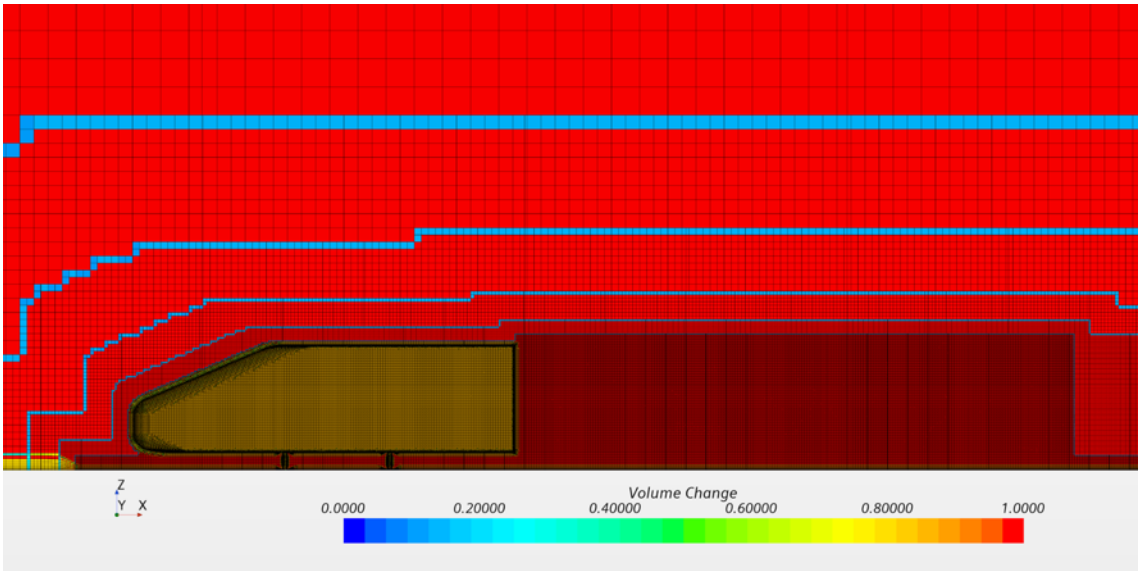

Figure 5: Grid g2 side view (cut through pins)

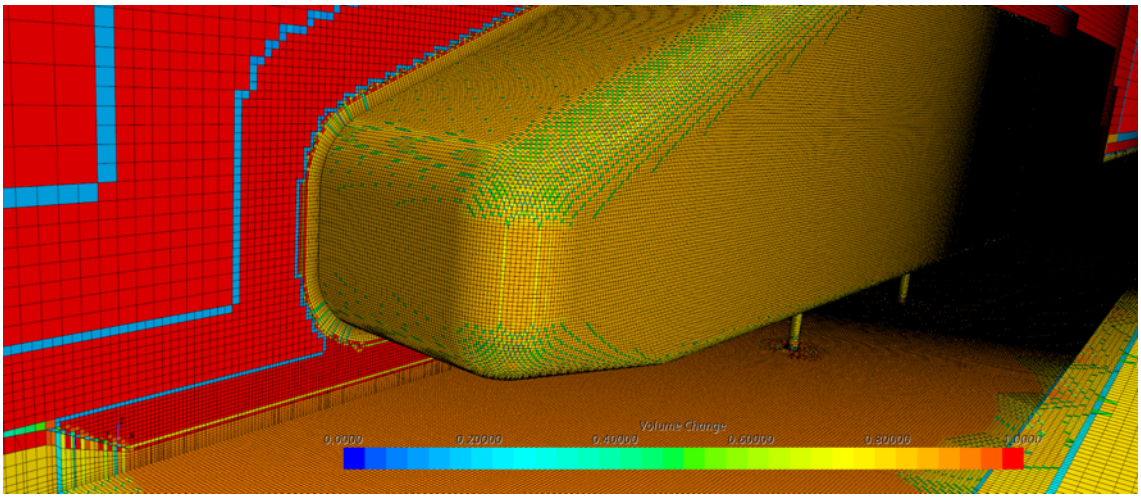

Figure 6: Grid g2 nose detail (cut through symmetry)

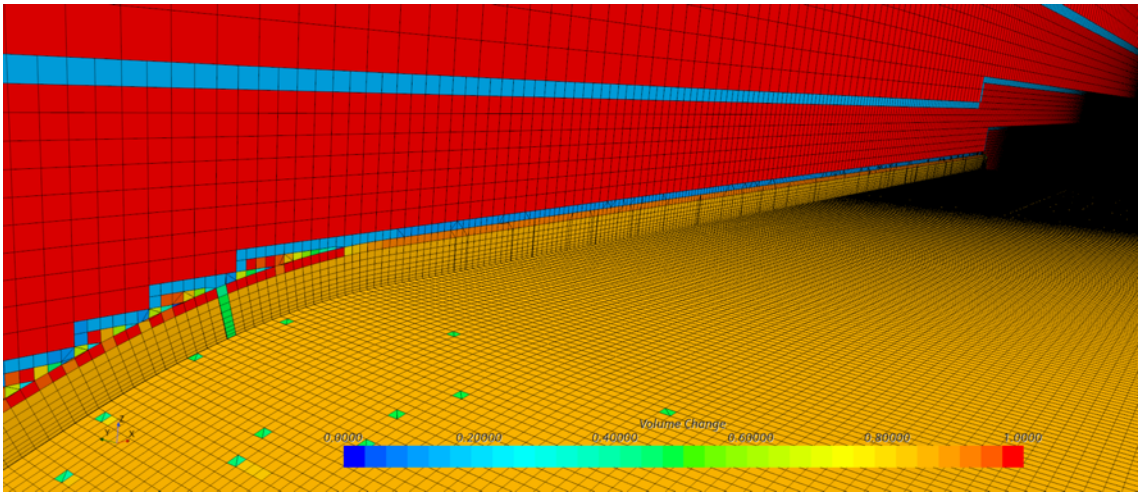

Figure 7: Grid g2 roof prism layer (cut through symmetry)

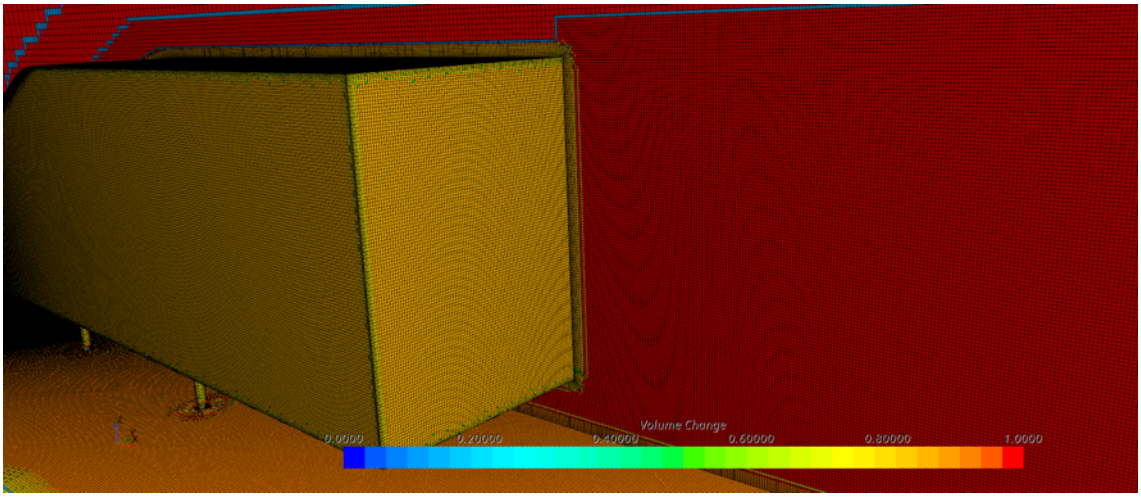

Figure 8: Grid g2 rear detail (cut through symmetry)

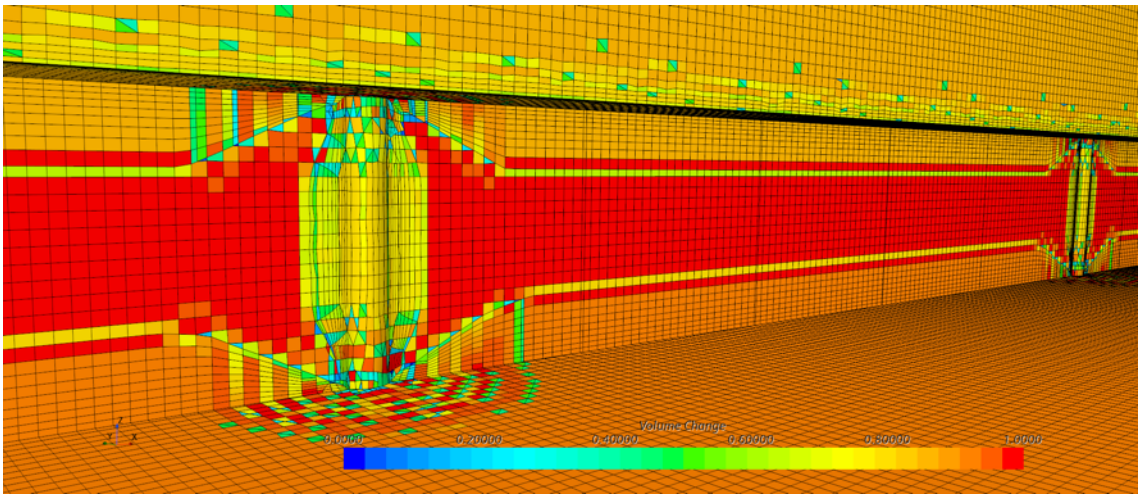

Figure 9: Grid g2 pin detail (cut through pins)

Table 1: Grid Parameters

Component	Description	Item	g1 (coarse)	g2 (baseline)	g3 (fine)
Car	Surface	Size (m)	$4.8\text{x}10^{-3}$	$2.4\text{x}10^{-3}$	$1.32\text{x}10^{-3}$
	Shoulder/pin	Size (m)	$2.4\text{x}10^{-3}$	$2.4\text{x}10^{-3}$	$1.32\text{x}10^{-3}$
	Prism Layer	Number	9	9	9
		Thickness* (m)	0.0144	0.01194	0.01382
		Near wall size (m)	$0.7\text{x}10^{-3}$	$0.7\text{x}10^{-3}$	$0.7\text{x}10^{-3}$
Ground plane	Surface	Min Size (m)	0.096	0.048	0.0264
	Prism Layer	Number	9	9	9
		Thickness (m)	0.04	0.04	0.04
		Near wall size (m)	$1.5\text{x}10^{-3}$	$1.5\text{x}10^{-3}$	$1.5\text{x}10^{-3}$
Under car/wake	Surface	Min Size (m)	$4.8\text{x}10^{-3}$	$2.4\text{x}10^{-3}$	$1.32\text{x}10^{-3}$
	Prism Layer	Number	9	9	9
		Thickness (m)	0.013	0.013	0.013
		Near wall size (m)	$1.0\text{x}10^{-3}$	$1.0\text{x}10^{-3}$	$1.0\text{x}10^{-3}$
Wake Refine	Near	Extent x= (m)	0.48-2.0	0.48-2.0	0.48-2.0
		Size (m)	$4.8\text{x}10^{-3}$	$2.4\text{x}10^{-3}$	$1.32\text{x}10^{-3}$
	Far	Extent x= (m)	2.0-3.0	2.0-3.0	2.0-3.0
		Size (m)	$9.6\text{x}10^{-3}$	$4.8\text{x}10^{-3}$	$2.64\text{x}10^{-3}$
Number of Cells			**$6.31\text{x}10^{6}$**	**$37.3\text{x}10^{6}$**	**$197.5\text{x}10^{6}$**

* the thicknesses is nominally 0.013 m, but to ensure a clean match between the prism layer outer surface and the core cells the input thickness has been tuned for each grid.

Grids are supplied in CGNS, OpenFOAM, ANSYS Fluent .msh and Simcenter Star-CCM+ .ccm formats.

Reference Conditions

The reference frontal area used for force and moment coefficients is defined by the vehicle height and width and rounded to be 0.112 m^2. The reference length used for pitching moment is the wheelbase 0.6375 m.

The CAD geometry of the model has its origin on the ground plane, in the symmetry plane midway between the wheels. The coordinate system has x in the streamwise direction (hence the nose is negative x), z upwards and hence positive y is towards the right of the vehicle.

With this coordinate system, drag is in the positive x-direction, lift is in the positive z-direction, pitching moment is around the y-direction with a nose up moment being positive. The vehicle has been yawed by 2.5 degrees, but the grid retains the tunnel coordinate system.

The force and moment coefficients are in the reference frame of the yawed vehicle – not the wind tunnel reference frame. For the rotated model in the supplied grids, the vehicle should produce a positive side force.

The freestream velocity magnitude and pressure used in the definition of force coefficients. should be taken from a probe at [-2.0,0,1.3] m. This is ahead of the car, on the centreline and near the roof. It replicates the approach taken in the wind tunnel and means that the freestream velocity magnitude and pressure is slightly different to that applied as a boundary condition to the inlet. There are no corrections applied to the CFD data.

Test Cases

A 2.5 degree yaw case at an inlet condition of 40 m/s, with a Reynolds number of 2.9×10^6 based on the vehicle length, should be run for the baseline **g2** grid.

When presenting pressure and force coefficients, the experimental data uses a free stream probe approximately 2m forward of the origin mounted near the roof of the tunnel to determine total and static pressure. The same procedure should be used when presenting CFD data, the local static pressure and velocity magnitude at [2, 0.0, 1.3] m should be used for normalisation of force and pressure coefficients. Note that no other forms of wind tunnel correction should be used for the data supplied to the workshop. As the mounting pins are connected to the balance, these need to be included when integrating force coefficients. Since this does not produce an enclosed surface, there may be a small error due to the 'open end' of the pin. If the integration is computed from local $(P-P_{ref})$ rather than an integration of P with a final subtraction of P_{ref} then the error will be negligible. For moment coefficients, the origin is mid-track, mid-wheelbase on the tunnel floor and corresponds to the origin in the coordinate system of the CAD/grid. The length used in the moment coefficient is the wheelbase (0.6375m) and positive pitching moment corresponds to a nose up force.

You should assume that the model is fully turbulent. Although it is likely that there are some regions of laminar flow at the nose of the vehicle, this is not documented in the experimental measurements.

The workshop requests that you use the standard grid. If your CFD methodology is unable to use the grids provided (e.g. LBM type code) then your grid (or lattice) should be set up to match the parameters provided in Table 1 as closely as possible.

It is planned to create some alternative polyhedral and tetrahedral grids with the number of cells matching that of baseline **g2**.

Data Submission

To be confirmed.

Experimental Pressure Probe Locations

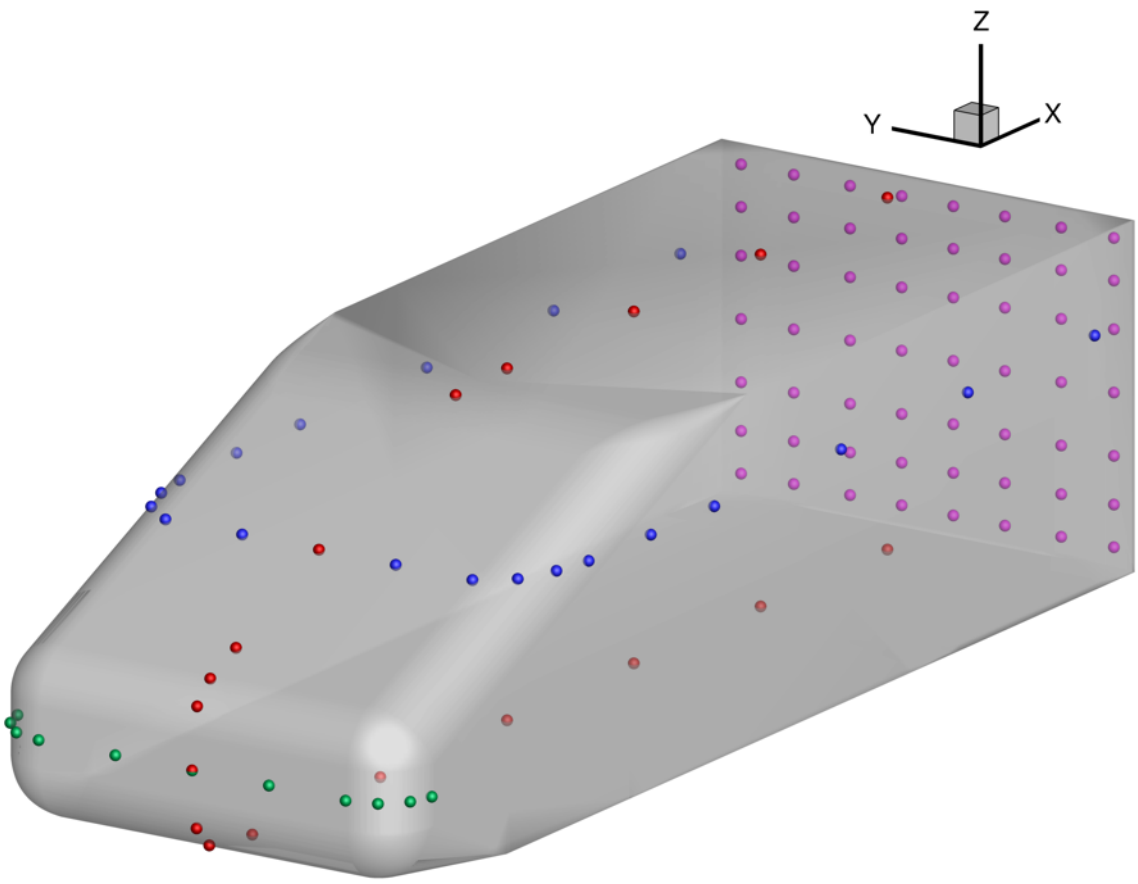

Figure 10: Experimental pressure tapping locations

In comparison to the second Automotive CFD Workshop, the PIV planes stay fixed within the tunnel whilst the pressure tappings on the model have moved due to the small rotation about the origin.

Group 1 is a vertical cut plane through the symmetry, Group 2 is a horizontal cut plane at z=0.2595 m, Group 3 is around the 'bumper' and is not required here, Group 4 is a grid at the base. The supplied data for the lines should be at the resolution of your surface grid (i.e. not just at the experimental tapping locations), whilst for the base it is preferred interpolated to the pressure tapping coordinates.

Experimental PIV Slice Locations

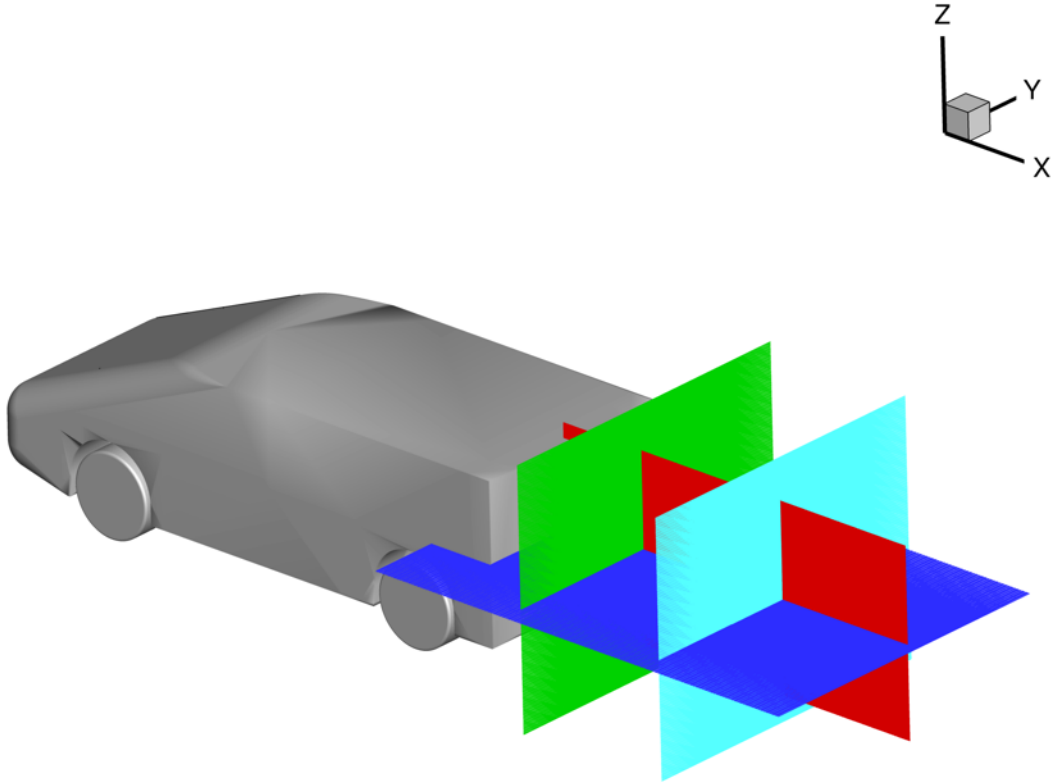

Figure 11: Experimental PIV slices

The horizontal slice (blue) is defined by: z=0.193 m, x=0.36 m to 1.20 m, y=-0.3 m to 0.3 m. (compared to planar PIV)

The vertical slice (red) is defined by: y=-0.003 m, x=0.467 m to 1.184 m, z=0.0 m to 0.366 m. (compared to interpolated tomographic PIV)

The cross flow slice (green) are defined by: x=0.633 m, y=-0.3 m to 0.3 m, z=0 m to 0.44 m. (compared to interpolated tomographic PIV)

(light blue has been removed as it is outside the tomographic field of view)

References

[1] Varney, M., "Base Drag Reduction for Squareback Road Vehicles," Loughborough University, Feb, 2020. 10.26174/thesis.lboro.11823759.v1

[2] https://repository.lboro.ac.uk/articles/dataset/Windsor_Body_Experimental_Aerodynamic_Dataset/13161284

[3] https://www.nwtf.ac.uk/dataset/1709/

[4] Johl, G., Martin A. Passmore, and Peter M. Render. 2010. "Design Methodology and Performance of an Indraft Wind Tunnel," The Aeronautical Journal, September 2004. https://hdl.handle.net/2134/6674

Version History

0.5 19 February 2026: minor updates for AutoCFD5

0.4 19 April 2024: Combination of Definition and Submission documents

0.3 18 April 2024: Updated for Fourth Workshop

0.2 23 June 2022: clarification of yawed coordinate system for forces

0.1 7 March 2022: initial released version